# YMLED6142

RAL 7015 RAL 9005

**Power range: 30w-105w**

**AC120v-277v 50/60Hz**

**CREE XTE LED chip**

**INVENTRONICS driver**

**Die cast aluminum housing**

5 YEARS WARRANTY

IP65

# Certificate

# Product Dimensions(mm)

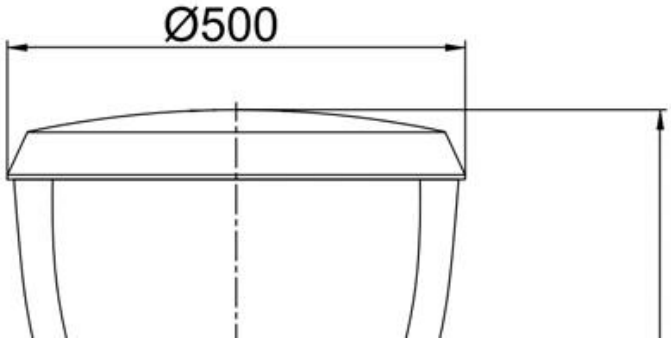

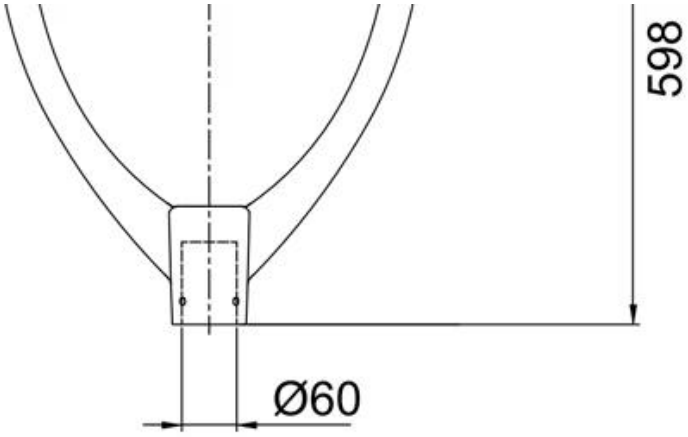


# Internal Structure

Die cast aluminum housing

Tempered glass

CREE XTE LED chip

Install pipe D76mm

# Polar Diagram

## Type1

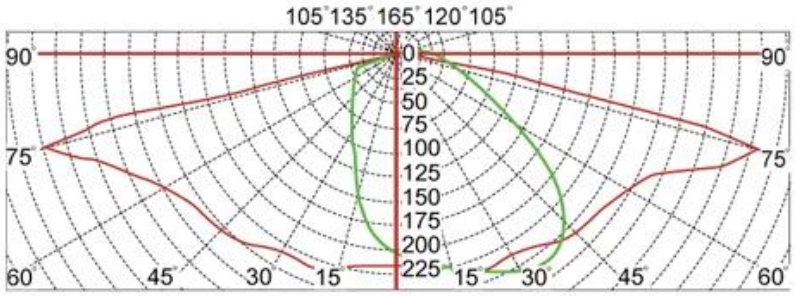


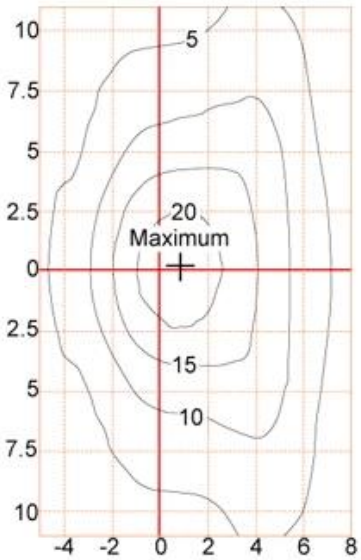


## Type2

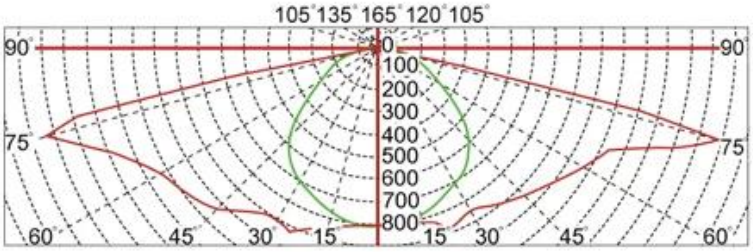
105° 135° 165° 120° 105°
90°
90°
75°
75°
60°
45°
30°
15°
15°
30°
45°
60°
0
100
200
300
400
500
600
700
800

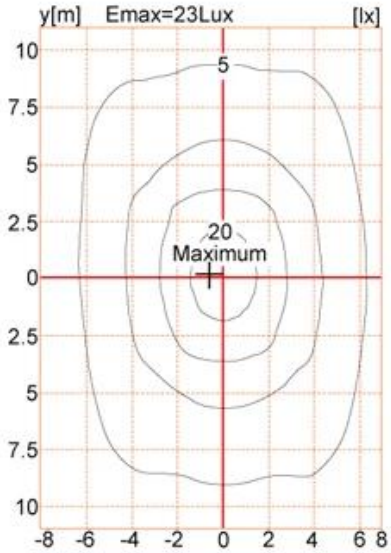
y[m]
Emax=23Lux
[lx]
10
7.5
5
2.5
0
2.5
5
7.5
10
5
20
Maximum
-8 -6 -4 -2 0 2 4 6 8

# Type3

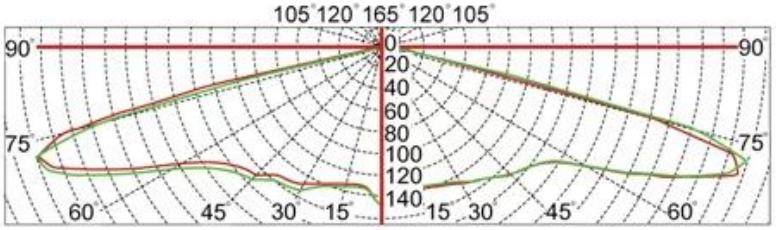
105° 120° 165° 120° 105°
90°
90°
75°
75°
60°
45°
30°
15°
15°
30°
45°
60°
0
20
40
60
80
100
120
140

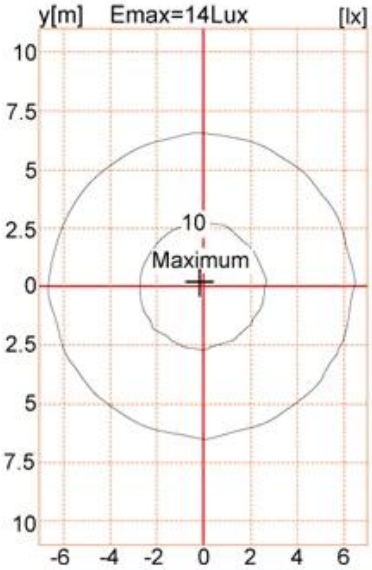
y[m]
Emax=14Lux
[lx]
10
7.5
5
2.5
0
2.5
5
7.5
10
10
Maximum
-6 -4 -2 0 2 4 6

# Configuration Data:

| 产品型号<br>Product Code | 额定功率<br>Rated Power | LED 颗数<br>LED Qty | 初始光通量<br>Luminous Flux | 毛净重<br>G.W/N.W | 包装尺寸<br>Packing Size | 装柜数量<br>Loading Qty |
|---|---|---|---|---|---|---|
| YMLED-6142 ( 16 ) | 30W | 16 | 3690 | 10.3/8.8(kgs) | 560x560x220mm | |
| YMLED-6142 ( 20 ) | 40W | 20 | 4920 | 10.3/8.8(kgs) | 560x560x220mm | |
| YMLED-6142 ( 24 ) | 55W | 24 | 6765 | 10.3/8.8(kgs) | 560x560x220mm | |
| YMLED-6142 ( 28 ) | 60W | 28 | 7380 | 10.3/8.8(kgs) | 560x560x220mm | 400PCS/20'GP |
| YMLED-6142 ( 32 ) | 70W | 32 | 8610 | 10.3/8.8(kgs) | 560x560x220mm | 1008PCS/40'HQ |
| YMLED-6142 ( 36 ) | 80W | 36 | 9840 | 10.3/8.8(kgs) | 560x560x220mm | |
| YMLED-6142 ( 40 ) | 90W | 40 | 11070 | 10.3/8.8(kgs) | 560x560x220mm | |
| YMLED-6142 ( 44 ) | 100W | 44 | 12300 | 10.3/8.8(kgs) | 560x560x220mm | |
| YMLED-6142 ( 48 ) | 105W | 48 | 12915 | 10.3/8.8(kgs) | 560x560x220mm | |

# Company Profile

Yuyao Yangming Lighting Co., Ltd. is mainly engaged in the development and production of garden lighting. Founded in 2001, it has developed more than 200 kinds of Garden lights, street lights,lawn lights,footpath lights, light poles,led lights and wall lights.

Now we are creating our own brands and developing products suitable for market. Welcome all friends to contact us. We will make contribution to lightening your home.

# Testing and Design

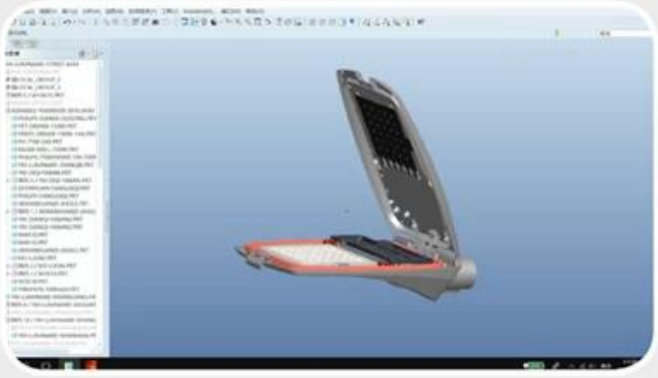

product design

led street lighting aging testing line.

ingress protetion (lp) testing equipment.

ullbrich sphere for testing luminous flux

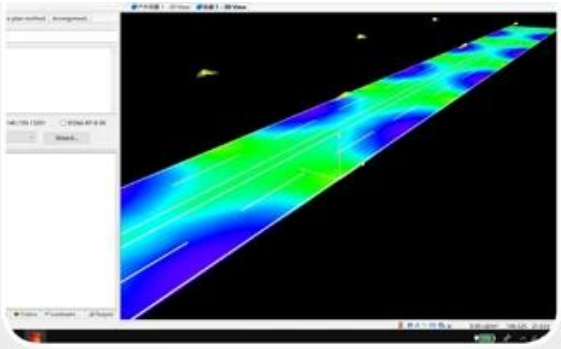

road lighting simulation

# Exhibittion

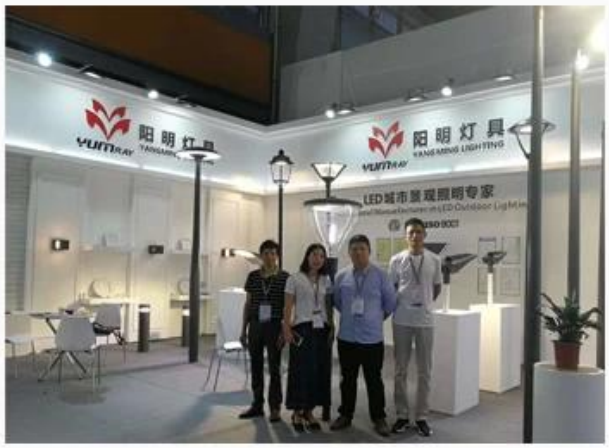

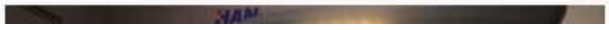

YUMRAY

Add：Minyin industrial Zone, Liangnong Town, Yuyao,Zhenjiang,China

Sale: 0574-22222345 / 22719888

0574-22672345(Fax)

Hotline: 0574-62359099

0574-62359077(Fax)

Http://www.ym-lighting.com

www.yyym2001.1688.com

www.yangminglamps.en.alibaba.com