When the details of our Bollard luz?

Die-cast aluminum housing, surface treatment power electrostaic cover die
Tampa da lâmpada de PC para PC UV
Carcaça lâmpada selada

When the specifications of our garden Bollard luz?

Classe de isolamento	Fonte de energia	Grau de proteção	Corronsion-proof ability	Ambiente de trabalho	Suporte de lâmpada	poder maximo
Classe I.	220V. 50 \\\ / 60 Hz	IP65.	Classe II.	-35. ° C to + 45 ° C	E27.	35w.

Foto do produto \ 's

PRODUCT DETAILS

PRODUCT DIMENSIONS(MM)

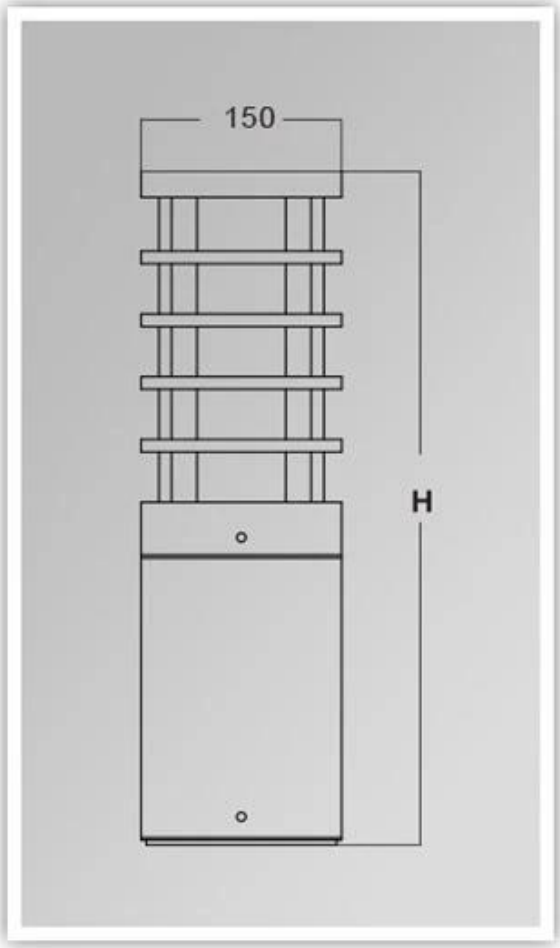

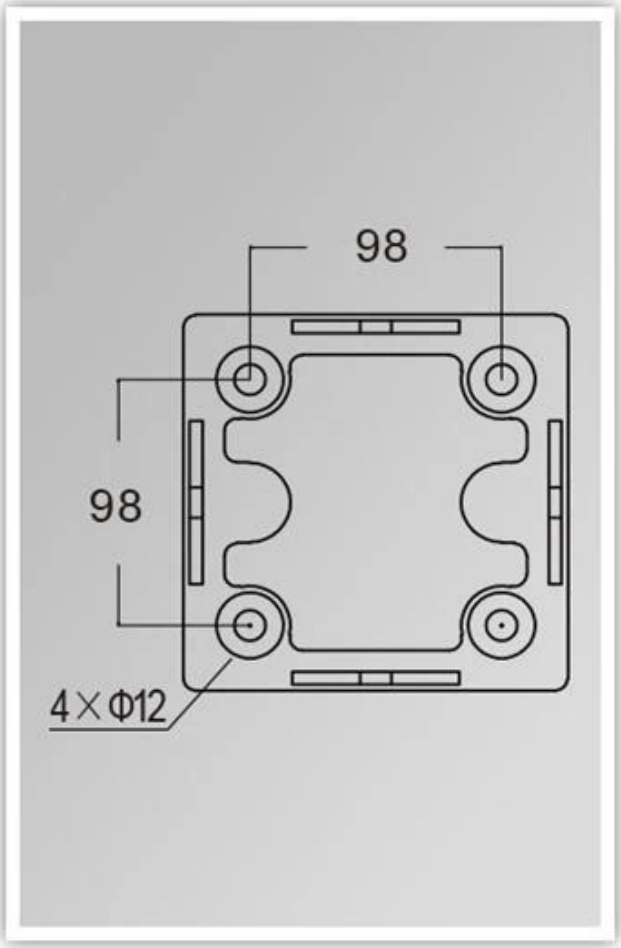

Postage and packaging, trade terms:

Envio
1. **DHL\/TNT\/FedEx\/UPS** \\ \\ \\ para **amostras**, De porta em porta,
2. **By air or sea** para **party goods**, by FCL; Airport \\\/Port receiving,
3. give customers freight forwarders or negotiable shipping methods,
4. **Prazo de entrega**: 5.-7 days for the samples; 15.-30. days for batch shipped goods.

Termos de pagamento
1. payment: **T \\\/T**, **Western Union**, **MoneyGram**,**Paypal.**; **30% deposit\'s**; **70% de balanço** before the delivery,
2. MOQ: **1 pcs,**
3. warranty: 5years