What is the Specifications of our LED Garden light?

Insulation class	Power supply	LED current	Power Factor	Working Ambient	Life span	CRI	CCT
Class I	120-277V 50/60HZ	700mA	>0.95	-40 °C to +55 °C	>50,000hrs	RA>75	3000K-6500K

Product Code	YMLED-6109(16)	YMLED-6109(20)	YMLED-6109(24)	YMLED-6109(28)
LED Qty	16pcs	20pcs	24pcs	28pcs
Rated Power	35w	45w	55w	60w
Luminous Flux	3100-3300lm	3950-4200	4850-5200lm	5350-5700lm
G.W/N.W	13.5/11.5kgs	13.5/11.5kgs	13.5/11.5kgs	13.5/11.5kgs
Packing Size	655x655x760mm	655x655x760mm	655x655x760mm	655x655x760mm

Product Photos

YMLED-6109

PRODUCT DIMENSIONS(MM)

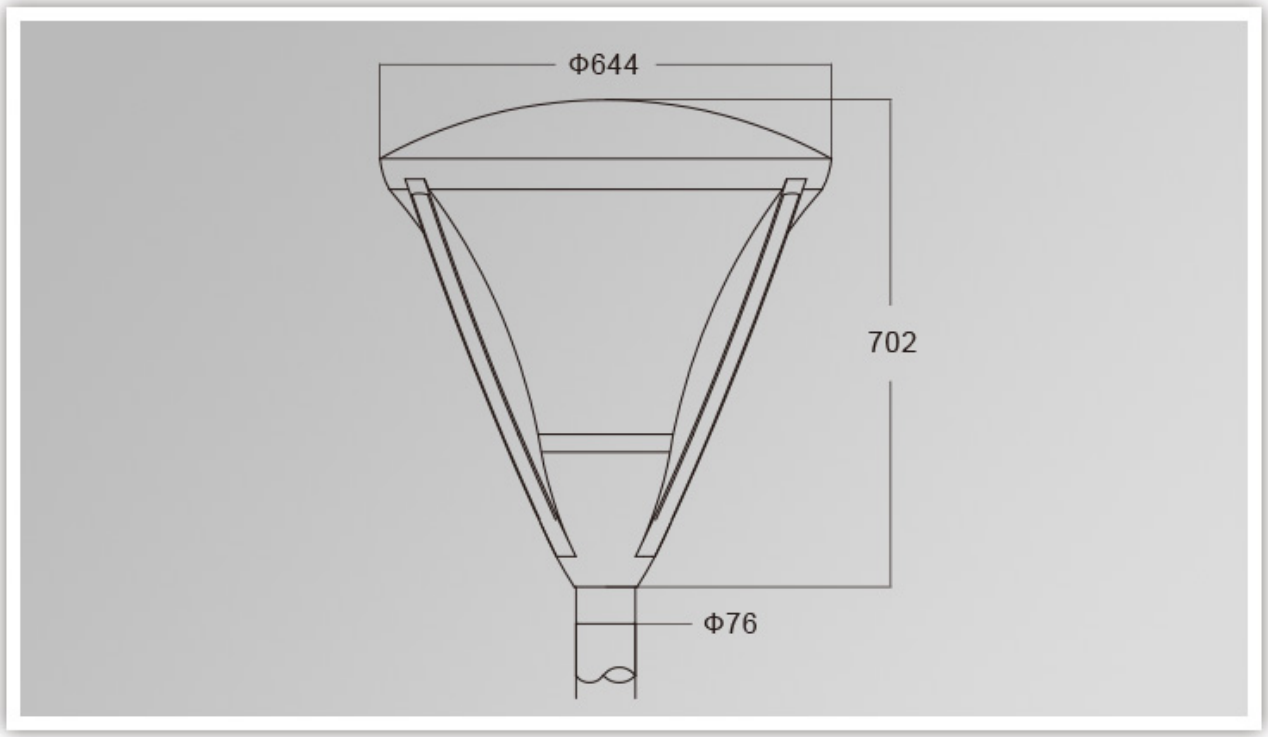

PRODUCT DETAILS

Polar Diagram

Type1

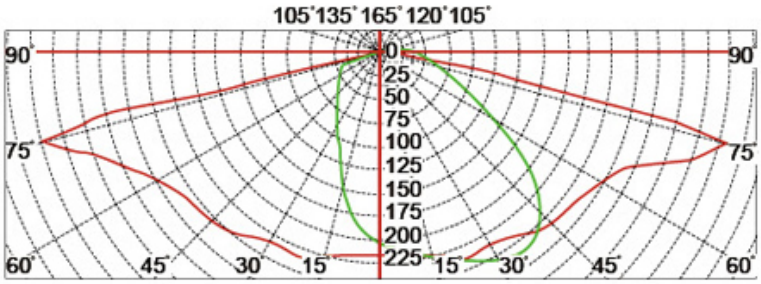

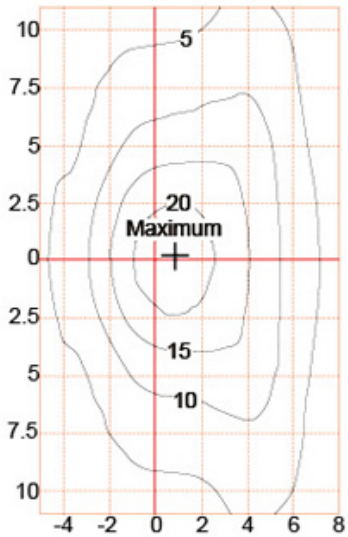

Type2

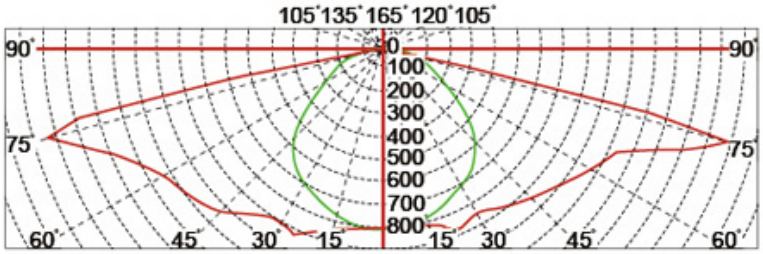

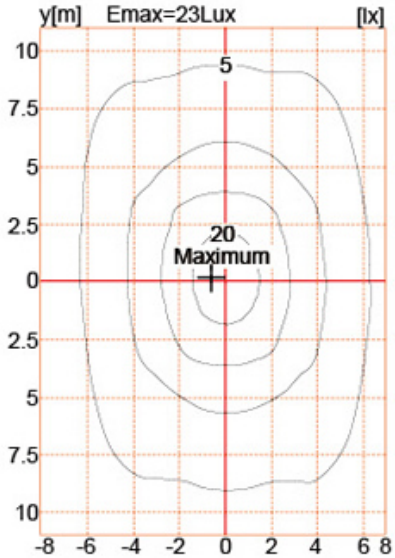

Type3

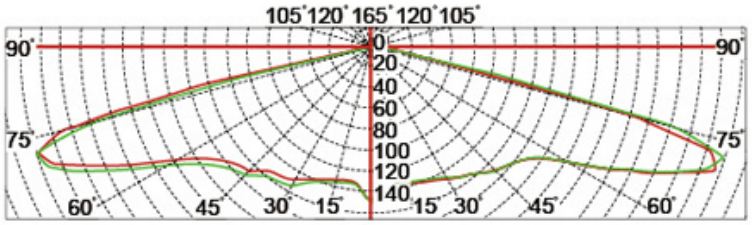

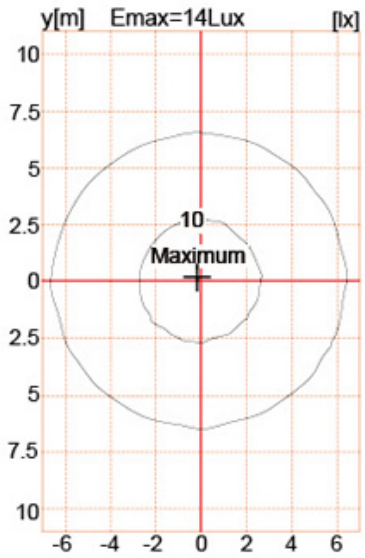

Packaging & Shipping ,Trade Terms:

Shipping

1. **FedEx/DHL/UPS/TNT** for **samples**, Door-to-Door,
2. **By Air or by Sea** for **batch goods**, for FCL; Airport/ Port receiving,
3. Customers specifying freight forwarders or negotiable shipping methods,
4. **Delivery Time**: 5-7 days for samples; 15-30 days for batch goods.

Payment Terms

1. Payment: **T/T**, **Western Union**, **MoneyGram**,**PayPal**; **30% deposits**; **70% balance** before delivery,
2. MOQ: **1pcs,**
3. Warranty: 5years