YMLED6142

RAL 7015 RAL 9005

Power range: 30w-105w

AC120v-277v 50/60Hz

CREE XTE LED chip

INVENTRONICS driver

Die cast aluminum housing

5 YEARS WARRANTY

IP65

Certificate

Product Dimensions(mm)

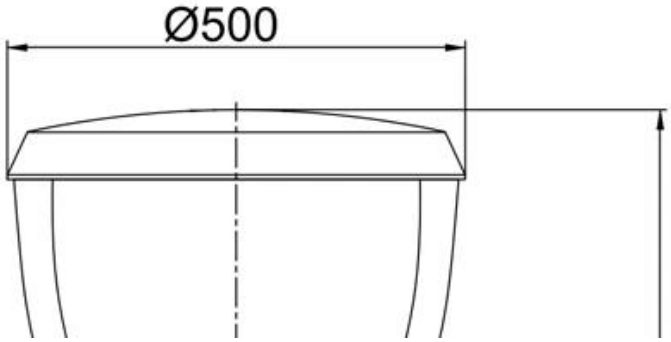

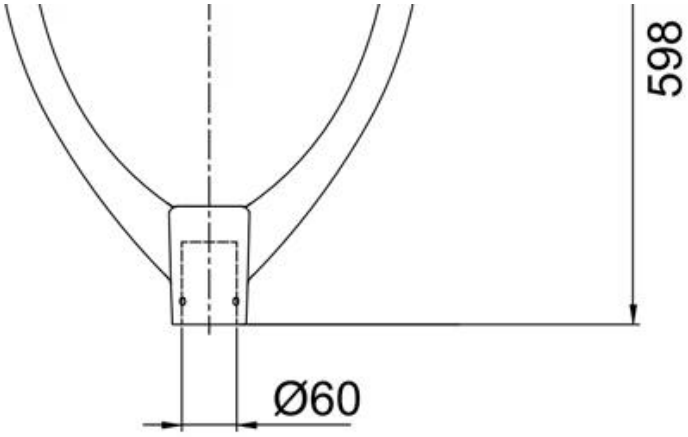

Internal Structure

Die cast aluminum housing

Tempered glass

CREE XTE LED chip

Install pipe D76mm

Polar Diagram

Type1

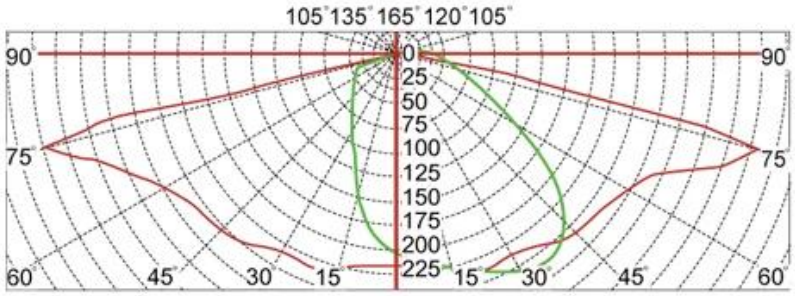

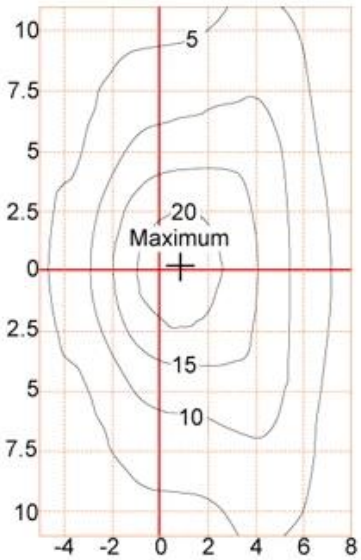

Type2

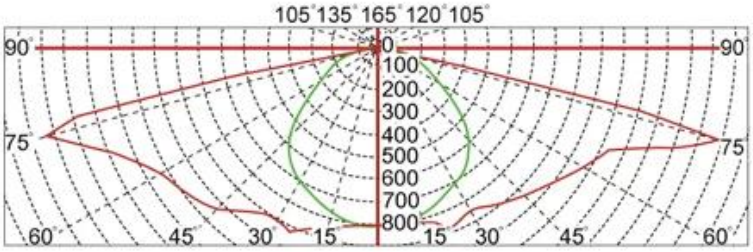
105° 135° 165° 120° 105°
90°
90°
75°
75°
60°
45°
30°
15°
15°
30°
45°
60°
0
100
200
300
400
500
600
700
800

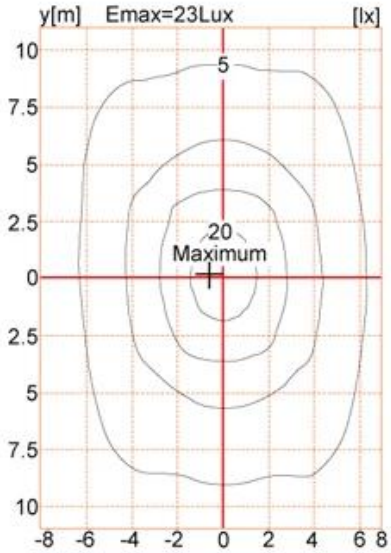
y[m]
Emax=23Lux
[lx]
10
7.5
5
2.5
0
2.5
5
7.5
10
5
20
Maximum
-8 -6 -4 -2 0 2 4 6 8

Type3

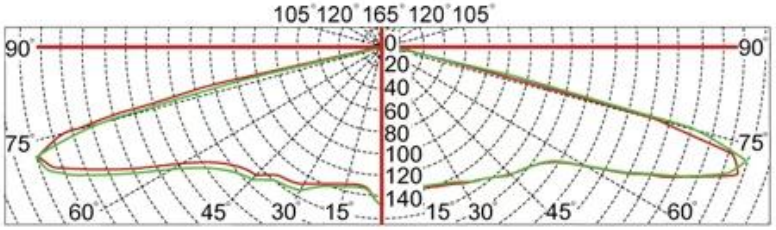
105° 120° 165° 120° 105°
90°
90°
75°
75°
60°
45°
30°
15°
15°
30°
45°
60°
0
20
40
60
80
100
120
140

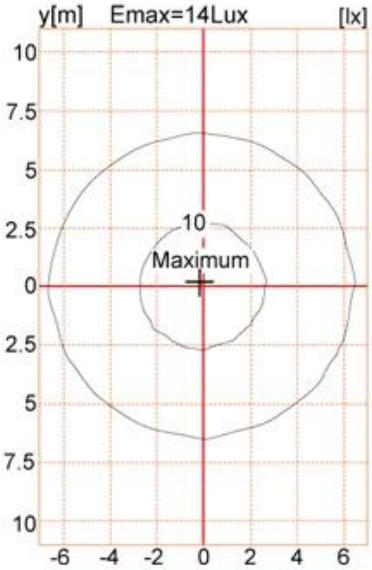
y[m]
Emax=14Lux
[lx]
10
7.5
5
2.5
0
2.5
5
7.5
10
10
Maximum
-6 -4 -2 0 2 4 6

Configuration Data:

产品型号 Product Code	额定功率 Rated Power	LED 颗数 LED Qty	初始光通量 Luminous Flux	毛净重 G.W/N.W	包装尺寸 Packing Size	装柜数量 Loading Qty
YMLED-6142 (16)	30W	16	3690	10.3/8.8(kgs)	560x560x220mm	
YMLED-6142 (20)	40W	20	4920	10.3/8.8(kgs)	560x560x220mm	
YMLED-6142 (24)	55W	24	6765	10.3/8.8(kgs)	560x560x220mm	
YMLED-6142 (28)	60W	28	7380	10.3/8.8(kgs)	560x560x220mm	400PCS/20'GP
YMLED-6142 (32)	70W	32	8610	10.3/8.8(kgs)	560x560x220mm	1008PCS/40'HQ
YMLED-6142 (36)	80W	36	9840	10.3/8.8(kgs)	560x560x220mm	
YMLED-6142 (40)	90W	40	11070	10.3/8.8(kgs)	560x560x220mm	
YMLED-6142 (44)	100W	44	12300	10.3/8.8(kgs)	560x560x220mm	
YMLED-6142 (48)	105W	48	12915	10.3/8.8(kgs)	560x560x220mm	

Company Profile

Yuyao Yangming Lighting Co., Ltd. is mainly engaged in the development and production of garden lighting. Founded in 2001, it has developed more than 200 kinds of Garden lights, street lights,lawn lights,footpath lights, light poles,led lights and wall lights.

Now we are creating our own brands and developing products suitable for market. Welcome all friends to contact us. We will make contribution to lightening your home.

Testing and Design

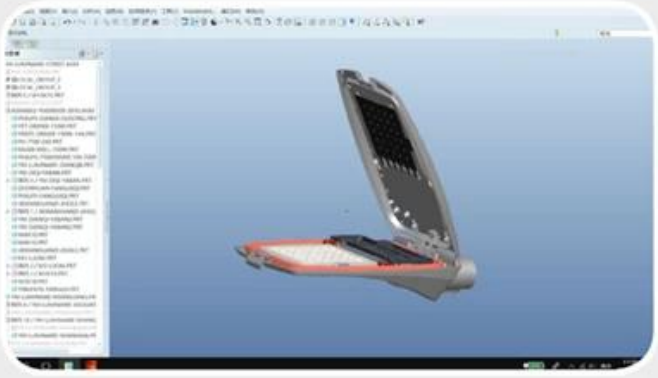

product design

led street lighting aging testing line.

ingress protetion (lp) testing equipment.

ullbrich sphere for testing luminous flux

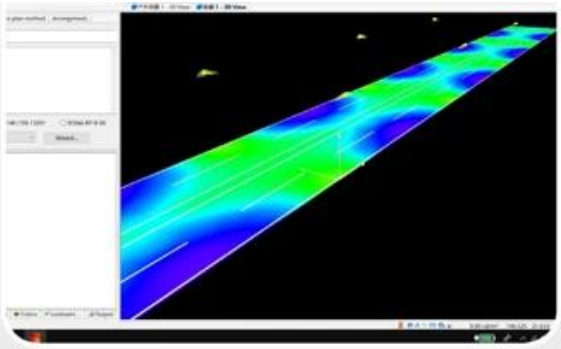

road lighting simulation

Exhibittion

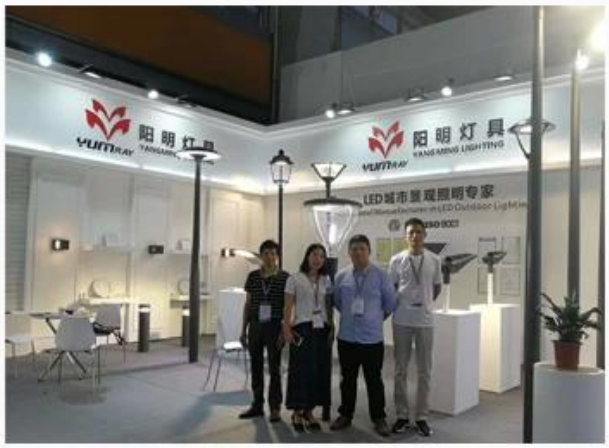

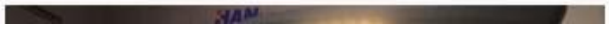

YUMRAY

Add：Minyin industrial Zone, Liangnong Town, Yuyao,Zhenjiang,China

Sale: 0574-22222345 / 22719888

0574-22672345(Fax)

Hotline: 0574-62359099

0574-62359077(Fax)

Http://www.ym-lighting.com

www.yyym2001.1688.com

www.yangminglamps.en.alibaba.com