What is the details of our LED Garden light?

Die cast aluminum housing,aluminum sheet rotating cover
Double photometric diffuser technology
Supper white toughened glass
Sealed lamp housing

What is the Specifications of our LED Garden light?

Insulation class	Power supply	LED current	Power Factor	Working Ambient	Life span	CRI	CCT
Class I	120-277V 50/60HZ	700mA	>0.95	-40 °C to +55 °C	>50,000hrs	RA>75	3000K-6500K

Product Code	YMLED-6113A(15)	YMLED-6113A(20)	YMLED-6113A(25)
LED Qty	15pcs	20pcs	25pcs
Rated Power	30w	45w	55w
Luminous Flux	2750-2940lm	4150-4400lm	5000-5390lm
G.W/N.W	14.5/12.4kgs	14.5/12.4kgs	14.5/12.4kgs
Packing Size	715x685x280mm	715x685x280mm	715x685x280mm

Product Photos

YMLED-6113A

PRODUCT DIMENSIONS(MM)

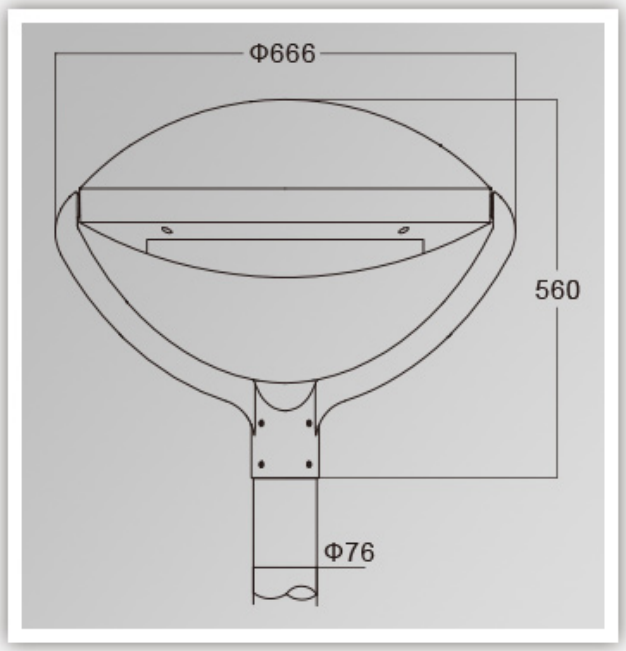

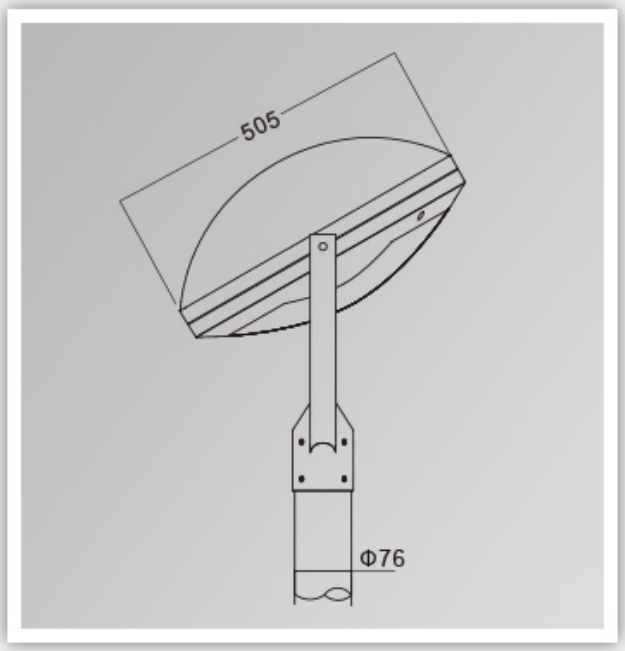

PRODUCT DETAILS

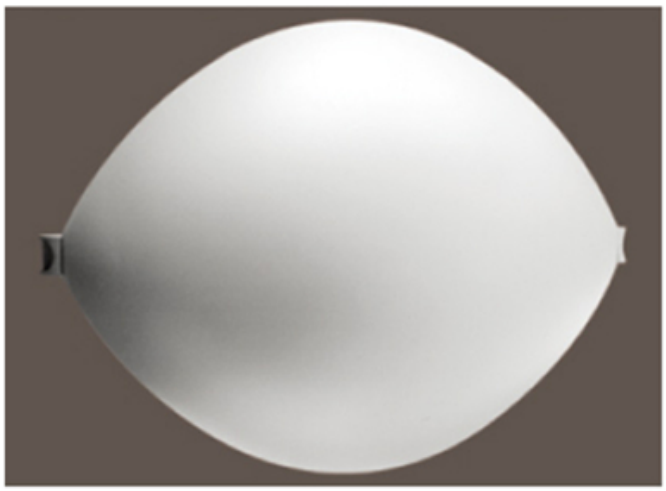

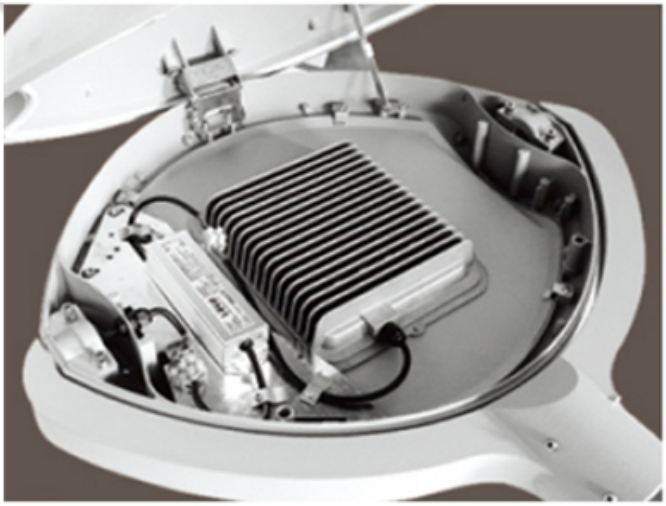

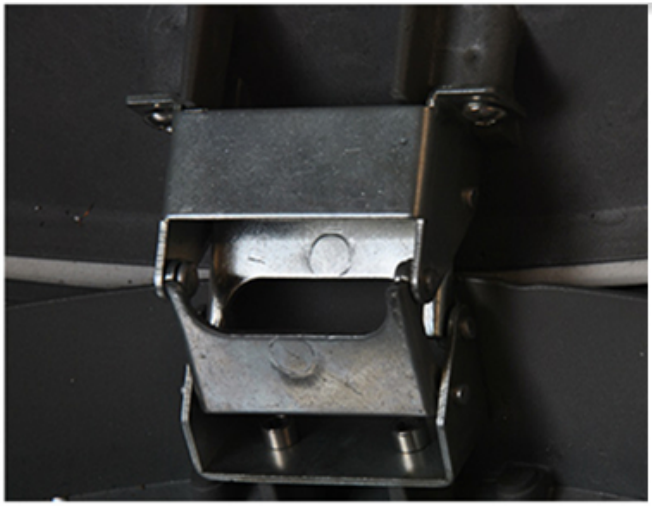

Polar Diagram

Type1

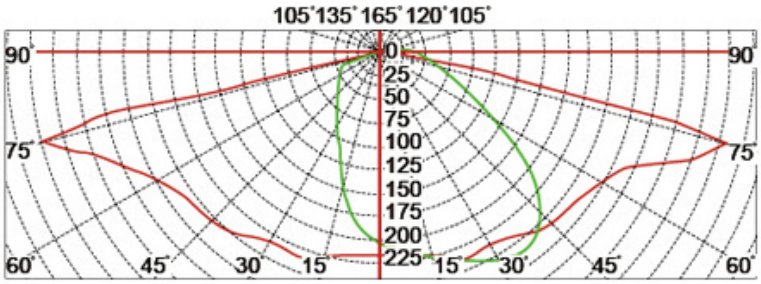

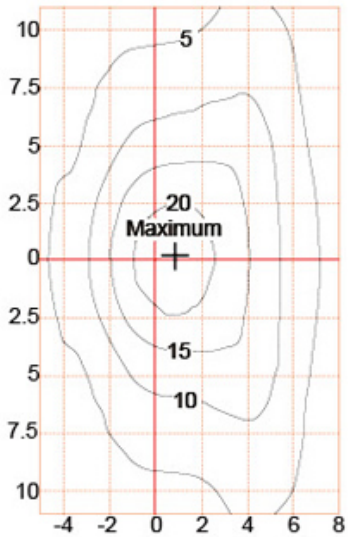

Type2

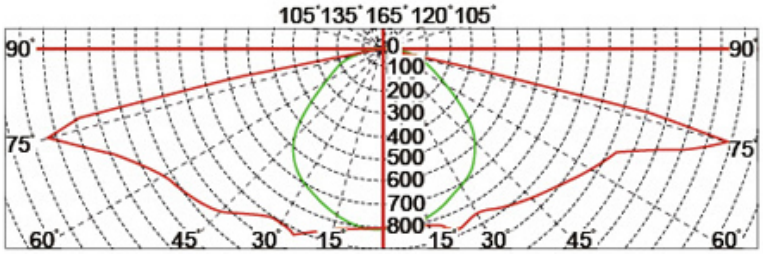

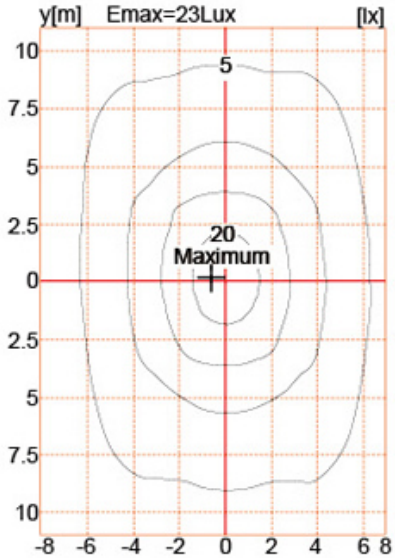

Type3

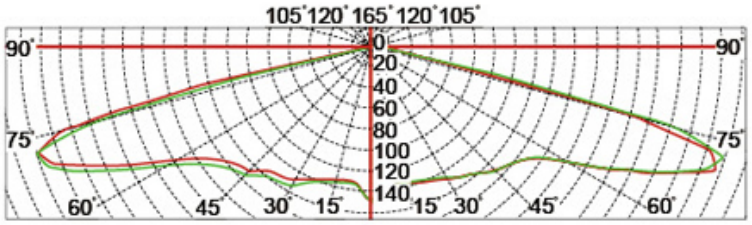

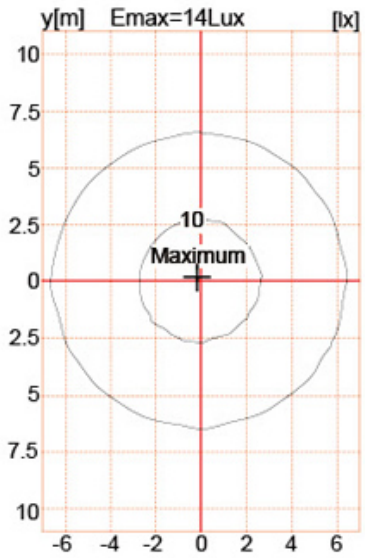

Packaging & Shipping ,Trade Terms:

Shipping

1. **FedEx/DHL/UPS/TNT** for **samples**, Door-to-Door,
2. **By Air or by Sea** for **batch goods**, for FCL; Airport/ Port receiving,
3. Customers specifying freight forwarders or negotiable shipping methods,
4. **Delivery Time**: 5-7 days for samples; 15-30 days for batch goods.

Payment Terms

1. Payment: **T/T**, **Western Union**, **MoneyGram**,**PayPal**; **30% deposits**; **70% balance** before delivery,
2. MOQ: **1pcs,**
3. Warranty: 5years