YMLED6107

RAL 7015 RAL 9005

Power range: 26w-65w

AC120v-277v 50/60Hz

CREE LED chip

INVENTRONICS driver

Die cast aluminum housing

5 YEARS WARRANTY

IP65

Certificate

Product Dimensions(mm)

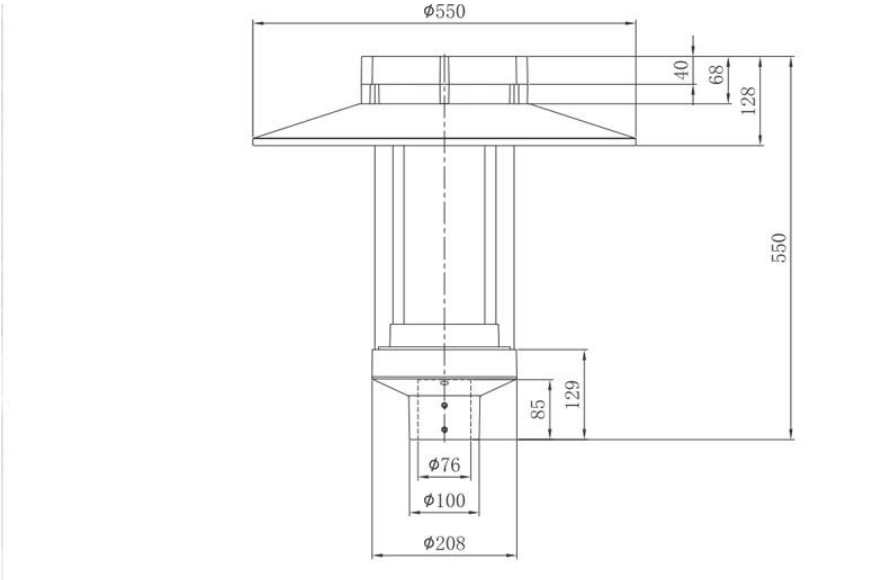

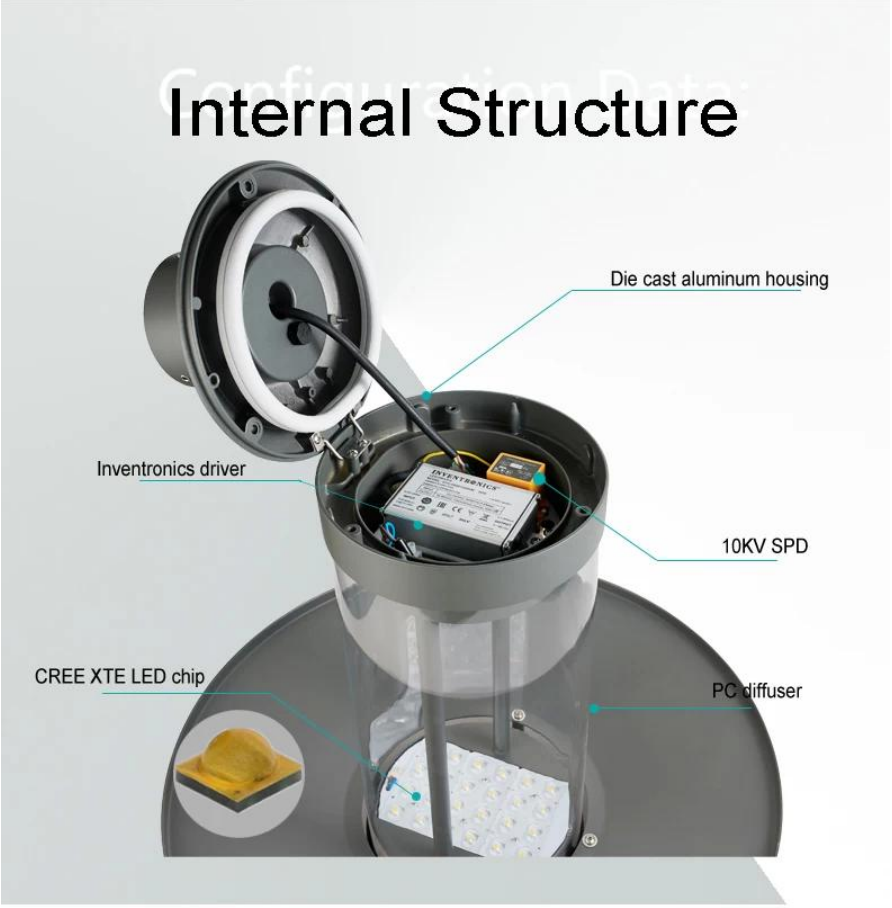

Polar Diagram

Type1

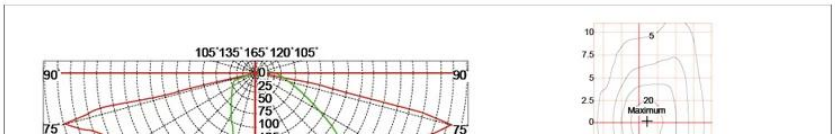

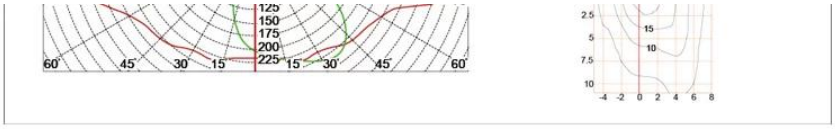

Type2

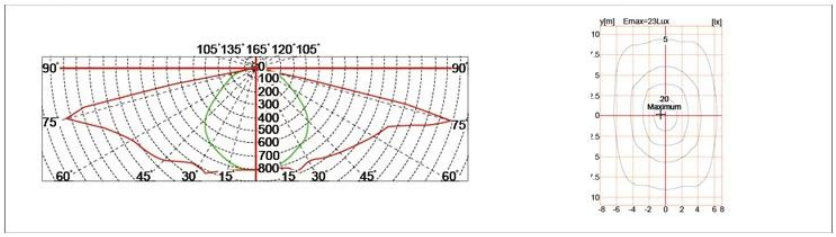

Type3

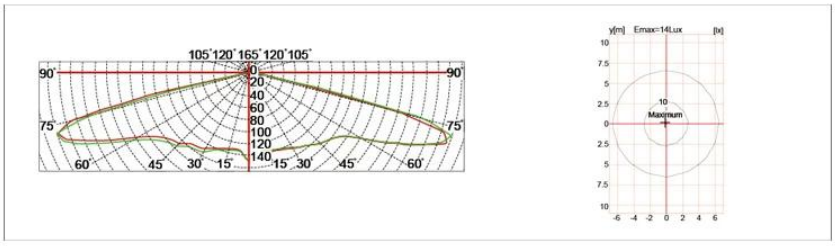

Configuration Data:

产品型号 Product Code	额定功率 Rated Power	初始光通量 Luminous Flux			毛净重 G.W/N.W	包装尺寸 Packing Size
		WW	NW	CW		
YMLED6107(12)	26W	3300	3380	3420	7.5kgs/6.5kgs	600x600x300mm
YMLED6107(16)	38W	4900	4940	4995	7.5kgs/6.5kgs	600x600x300mm
YMLED6107(20)	55W	7100	7150	7200	7.5kgs/6.5kgs	600x600x300mm
YMLED6107(24)	65W	8400	8450	8500	7.5kgs/6.5kgs	600x600x300mm

Company Profile

Yuyao Yangming Lighting Co., Ltd. is mainly engaged in the development and production of

ullbrich sphere for testing luminous flux

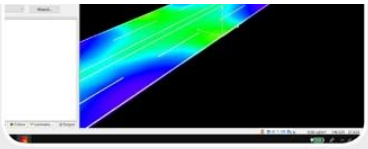

road lighting simulation

Exhibittion

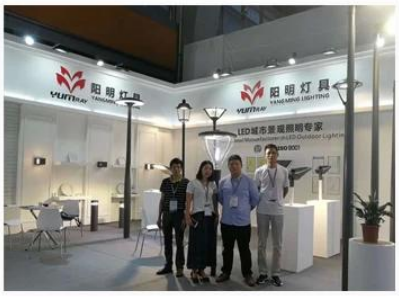

Add : Minyin industrial Zone, Liangnong Town, Yuyao,Zhenjiang,China
Sale: 0574-22222345 / 22719888
0574-22672345(Fax)
Hotline: 0574-62359099
0574-62359077(Fax)
Http://www.ym-lighting.com
www.yyym2001.1688.com
www.yangminglamps.en.alibaba.com