What is the details of our Garden Bollard licht?

Die cast aluminum housing,surface treatment for electrostaic power coating
UV-stop PC lamp cover
Sealed lamp housing

What is the Specifications of our Garden light?

Isolatieklasse	Stroomvoorziening	Protection grade	Corronsion-proof capability	Working Ambient	Lamphouder	maximum kracht
Class I	220v 50/60HZ	IP65	Class II	-35 °C to +45 °C	E27	35W

Product Photos

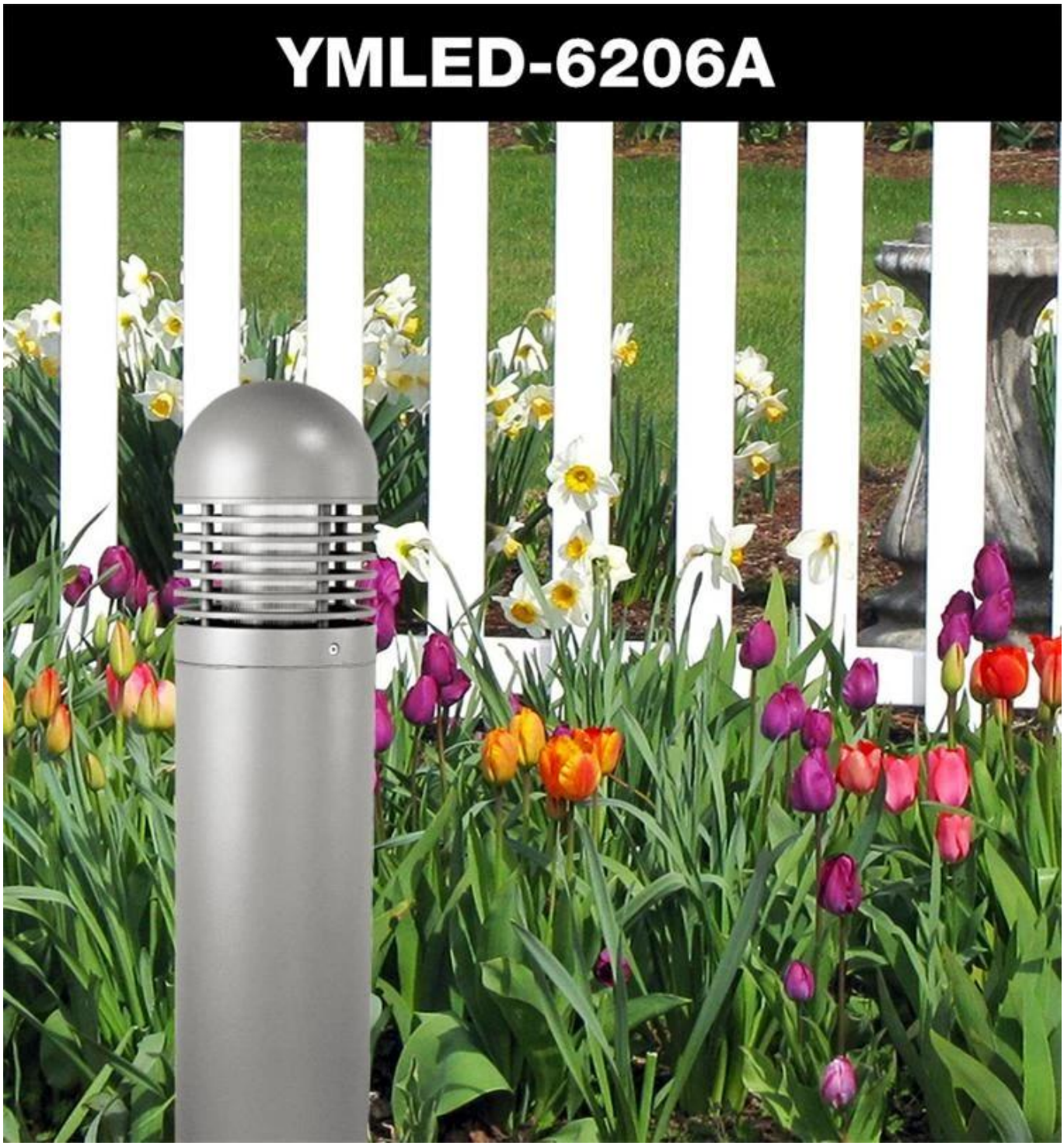

PRODUCT DIMENSIONS(MM)

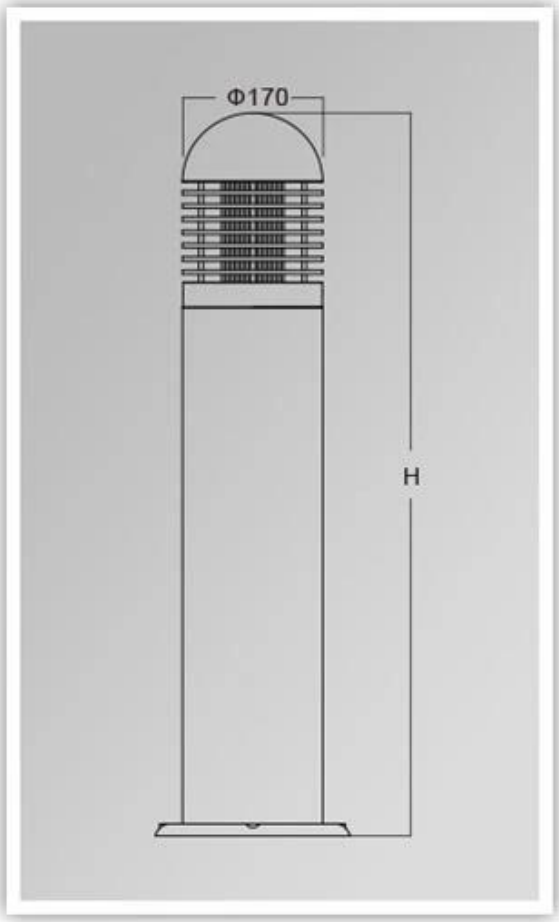

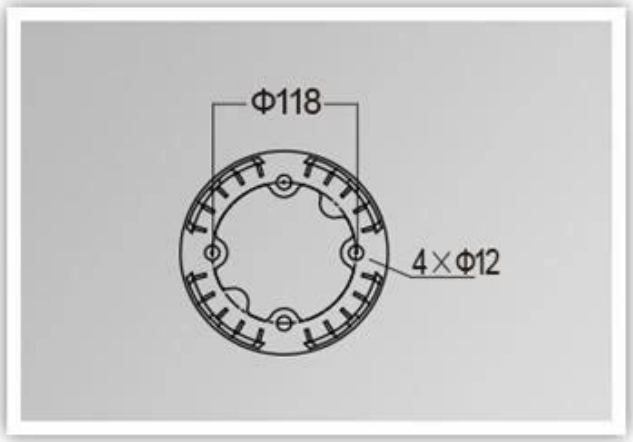

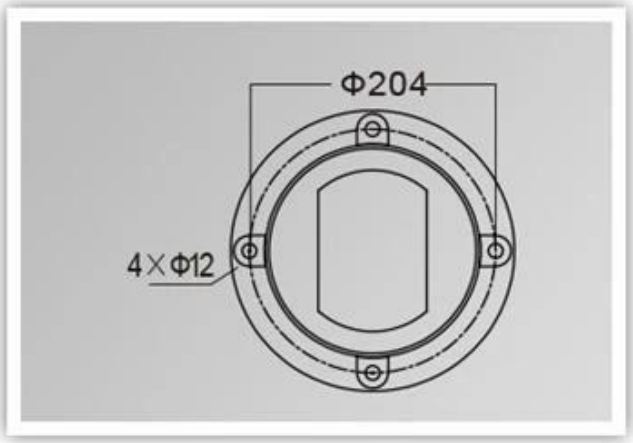

PRODUCT DETAILS

YM-6206A

YM-6206B

YM-6206C

Packaging & Shipping ,Trade Terms:

Verzending

1. **FedEx/DHL/UPS/TNT** voor **monsters**, Deur tot deur,
2. **By Air or by Sea** voor **batch goods**, for FCL; Airport/ Port receiving,
3. Customers specifying freight forwarders or negotiable shipping methods,
4. **Tijd om te bezorgen**: 5-7 days for samples; 15-30 days for batch goods.

Betaalvoorwaarden

1. Payment: **T/T**, **Western Union**, **MoneyGram**,**PayPal**; **30% deposits**; **70% balance** voor bezorging,
2. MOQ: **1 stuk,**
3. Warranty: 5years