[illegible]

[illegible]
[illegible]num num [illegible]
[illegible]

[illegible]LED[illegible]

[illegible]	[illegible]	LED[illegible]	[illegible]	[illegible]	[illegible]	[illegible]	c
[illegible]I.	120-277V 50 / 60Hz	700mA.	> 0.95	- 40. °C[illegible]+ 55 °C.	> 50,000HRS	RA> 75	3000K-6500K

[illegible]	YMLED-6404[illegible]15[illegible]	YMLED-6404[illegible]20[illegible]	YMLED-6404[illegible]25[illegible]
LED[illegible]	15[illegible]	20pcs	25[illegible]
[illegible]	30w.	45w.	55W
[illegible]	2750-2940LM	4150-4400LM	5000-5390LM
G.W / N.W.	7.2 / 6.2kgs	7.2 / 6.2kgs	7.2 / 6.2kgs
[illegible]	670x305x200mm	670x305x200mm	670x305x200mm

[illegible]

YMLED-6404

PRODUCT DETAILS

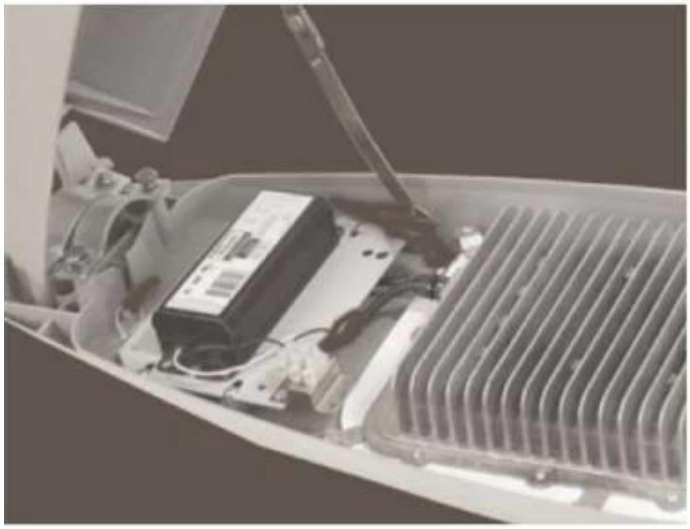

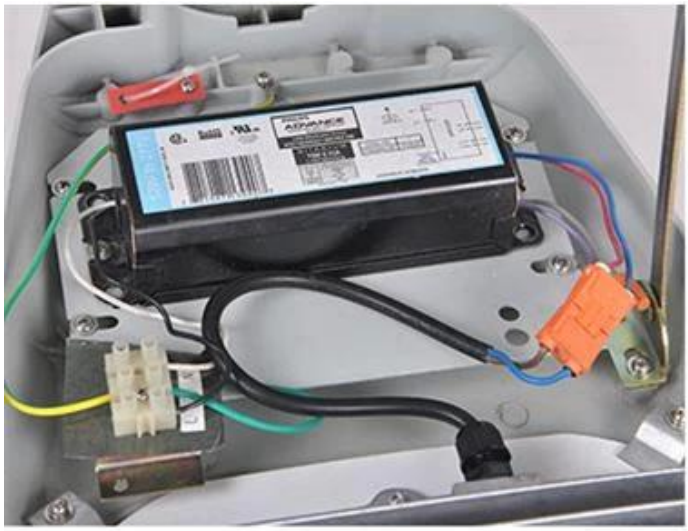

POLAR DIAGRAM

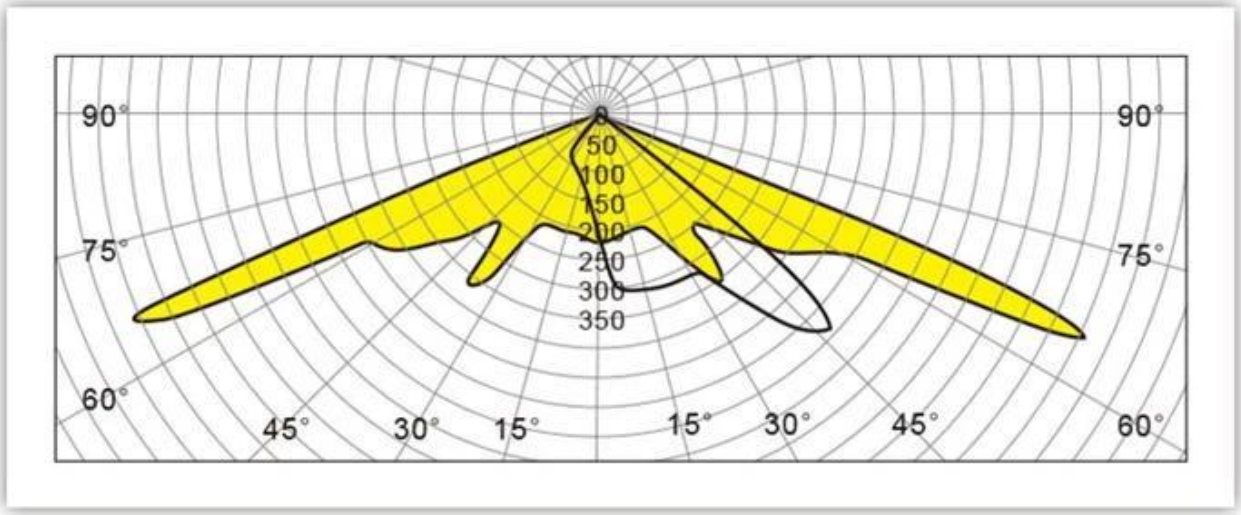

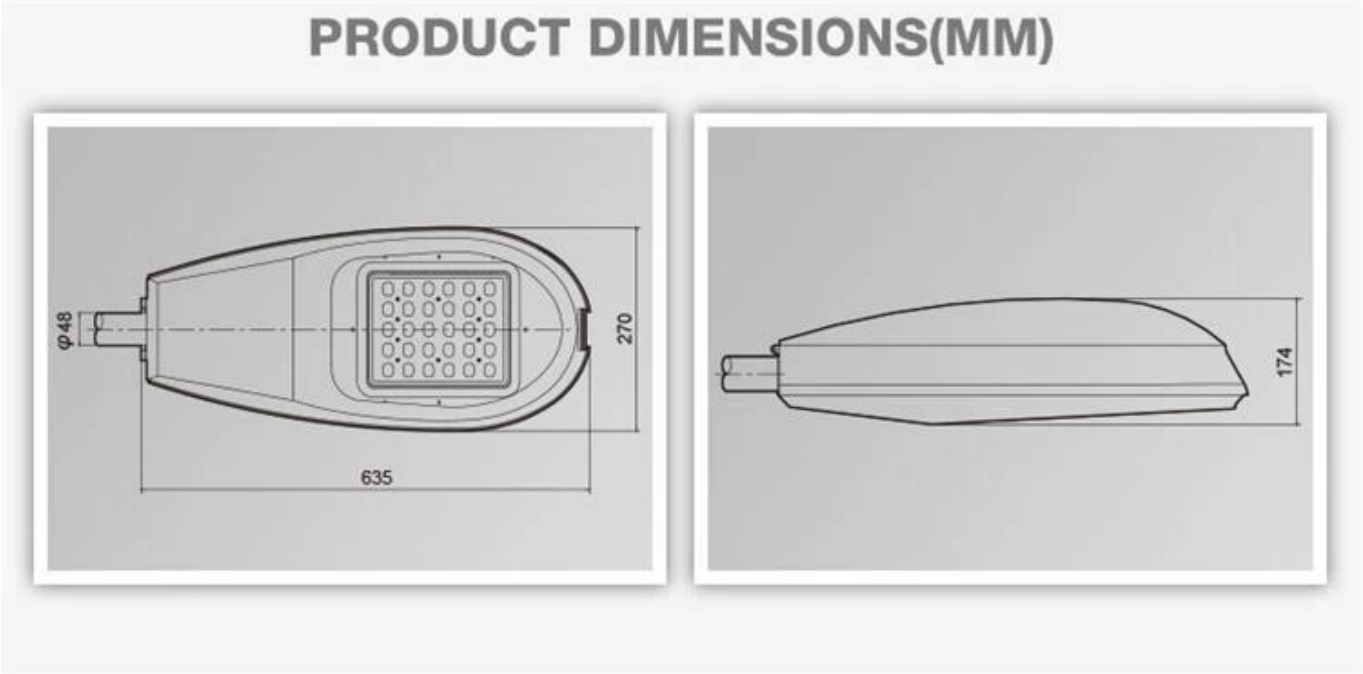

□□□□□□□□□□□□

□□
1□ □□□□□□□/ **DHL / UPS / TNT.** □□□ □□□□□ □□□□□□□
2□ □□□□□□□□ □□□ □□□□□□□□FCL□□□□□□□/□□□□□□□
3.□□□□□□□□□□□□□□□□□□□□□□□□□□□□□□□□
4□ □□□ 5.□□□□□□□□□-7□□ 15 - 30. □□□□□□□□□□
□□□□□
1.□□□□ **T / T.**□ □□□□□□□□□□□ □□□□□□□□□□□□□; **30**□□□□□□; **70**□□□□□□□ □□□□□□□
2□ MOQ□ **1**□□
3.□□□5□