What is the details of our LED Garden light?

ensemblecorpsMourirjeteraluminiumlogement
Double technologie de diffuseur photométrique
Souperblancheendurciverre
Boîtier de lampe scellée

Configuration Data:

Code produit	Puissance nominale	QTY LED	Flux lumineux	G.w / n.w	Taille d'emballage	Chargement de Qté
Ymbled-6114 (15)	35W	15	4200	8.5 / 7.5 (KGS)	490 * 490 * 650mm	132pcs / 20'gp
Ymbled-6114 (20)	45w	20	5400	8.5 / 7.5 (KGS)	490 * 490 * 650mm	384pcs / 40'HQ
Ymbled-6114 (25)	55W	25	6600	8.5 / 7.5 (KGS)	490 * 490 * 650mm	

Polar Diagram:

Type1

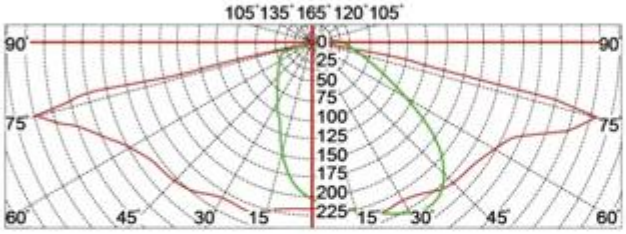

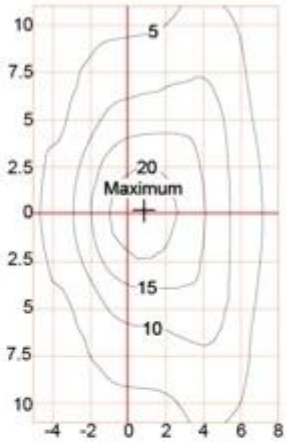

Type2

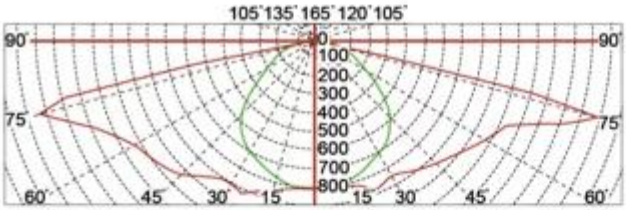

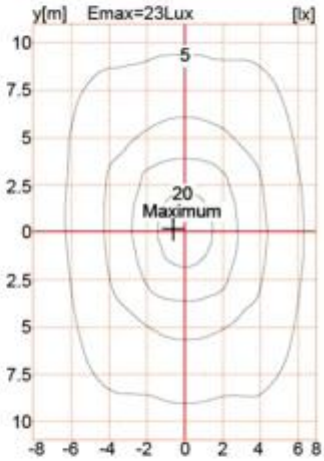

Type3

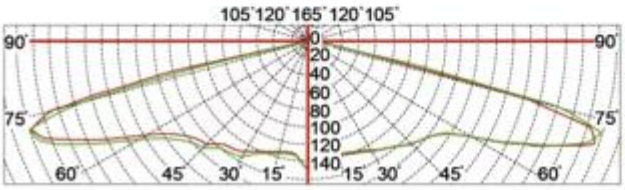

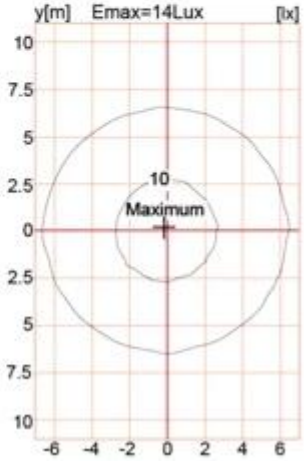

YMLED-6114

RAL 7015 RAL 9005

Product description:

whole body Die cast aluminum housing
Double photometric diffuser technology
Supper white toughened glass
Sealed lamp housing

IP65

Certificate

Product Dimensions(mm)

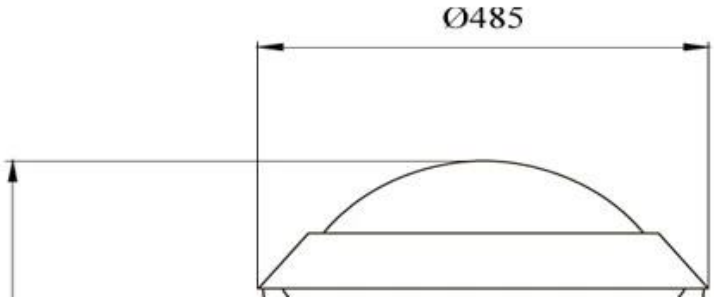

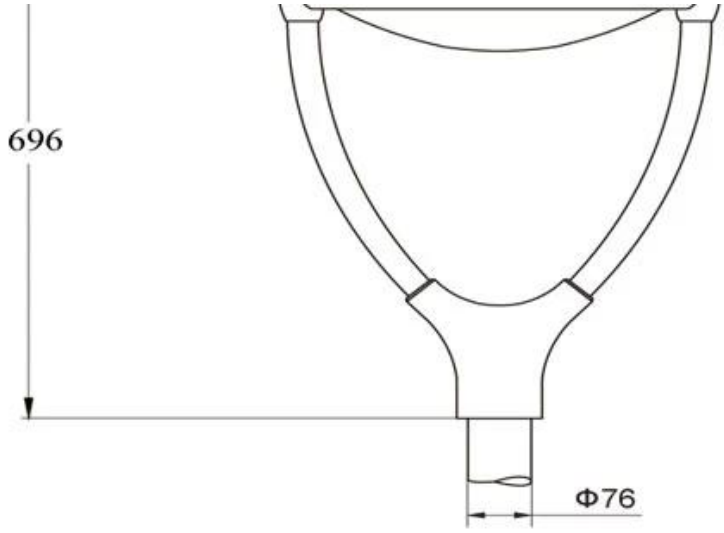
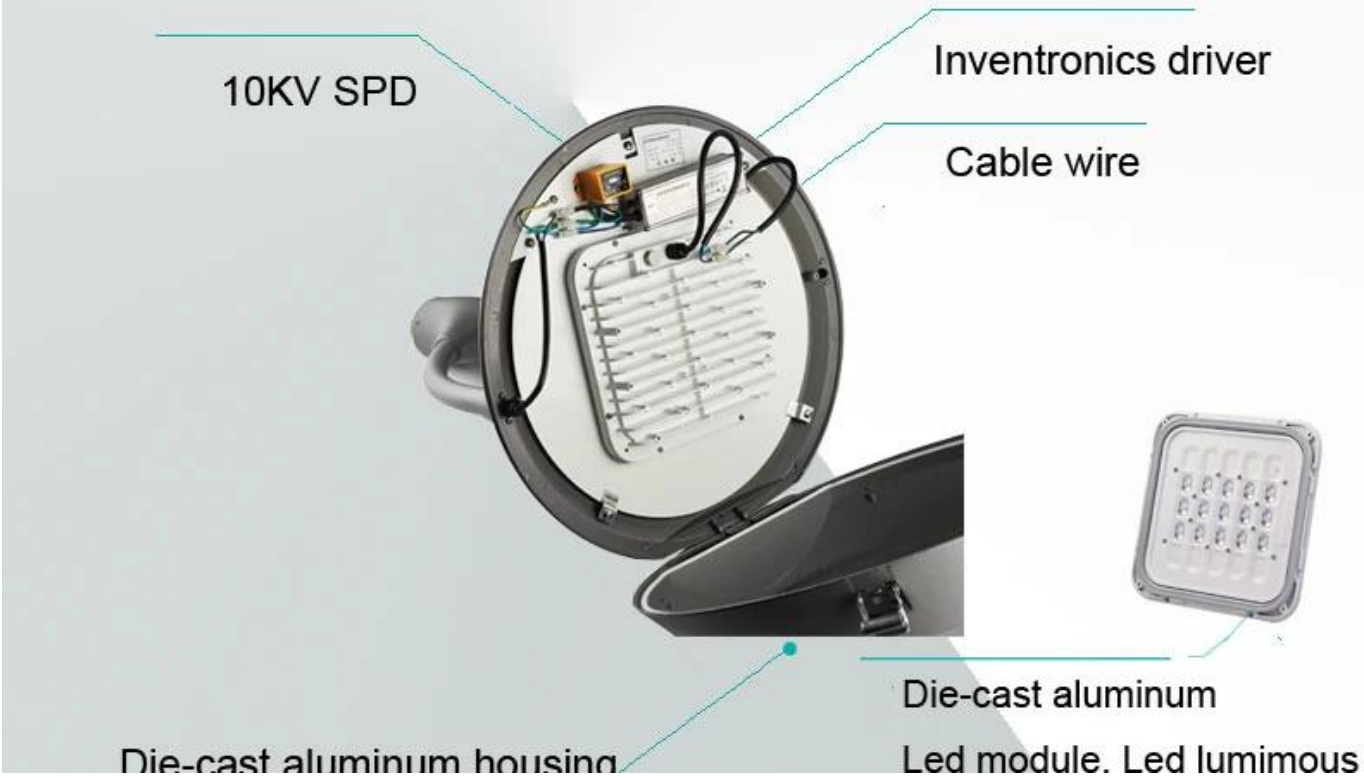
Internal Structure