YMLED-6801

RAL 7015 RAL 9005

Product description:

Low light charging, improved charging efficiency and balanced charge for single battery.

Intelligent operation, detecting charge discharge ratio to ensure overcast daylight.

Intelligent matching light source to improve load efficiency

Suitable for country roads, courtyards, parks

CE Intertek IP65

Certificate

Certificate

Product Dimensions(mm)

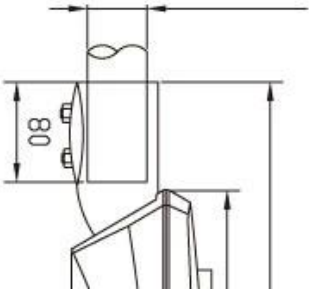

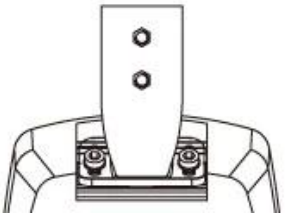

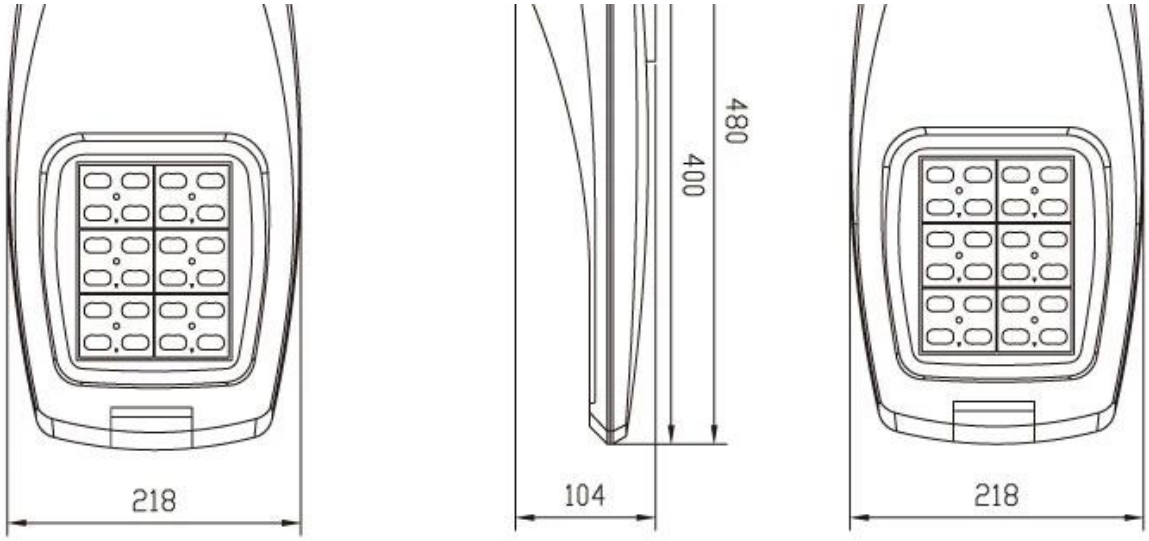

Internal Structure

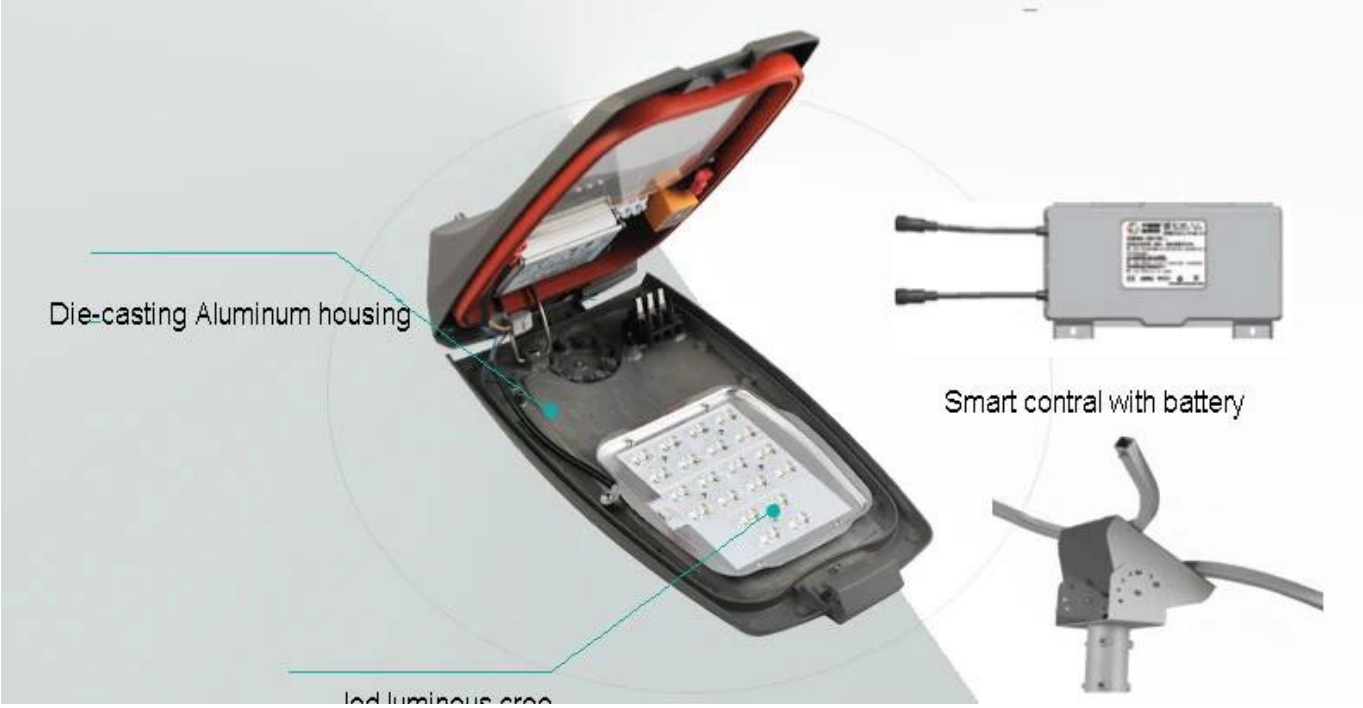

led luminous cree

XTE chips

Stainless steel material

with adjustable parts

Polar Diagram

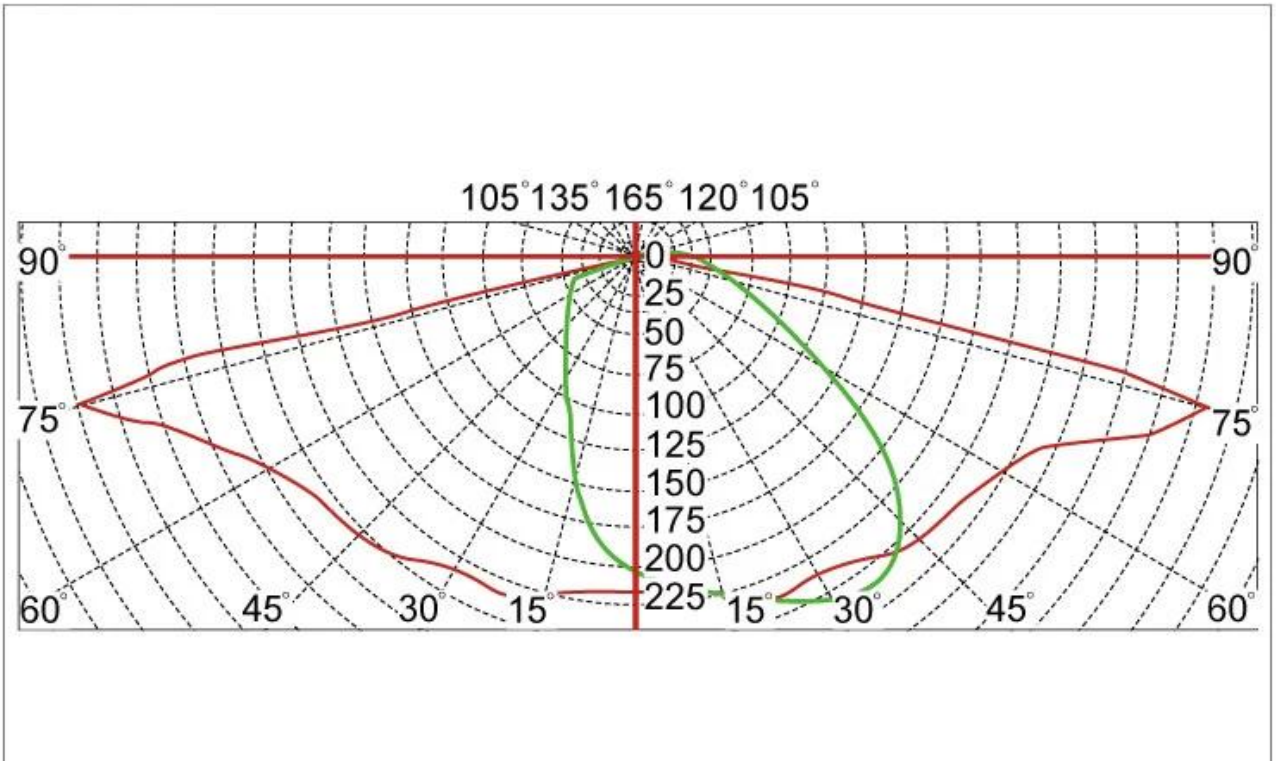

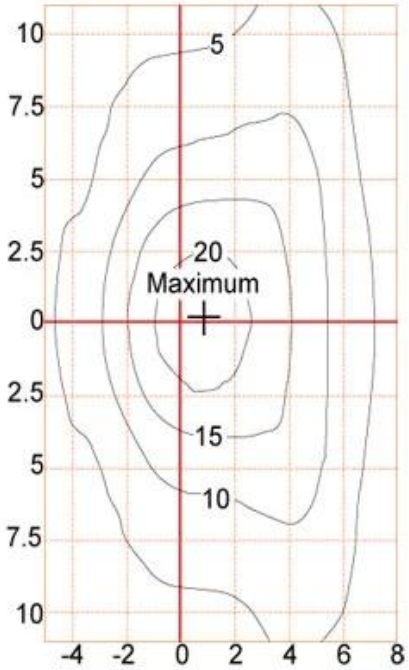
10
7.5
5
2.5
0
2.5
5
7.5
10
-4
-2
0
2
4
6
8
5
20
Maximum
15
10

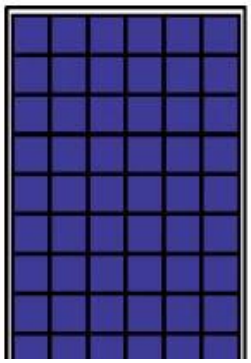

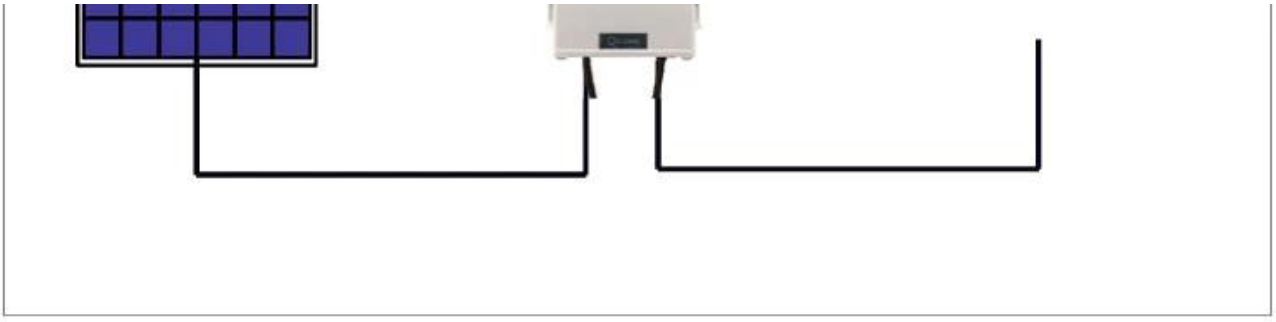

Configuration Data:

YMLED-6801-20W	20W	60W	30AH
YMLED-6801-30W	30W	80W	40AH
YMLED-6801-40W	40W	100W	50AH

Yuyao Yangming Lighting Co., Ltd. is mainly engaged in the development and production of garden lighting. Founded in 2001, it has developed more than 200 kinds of Garden lights, street lights,lawn lights,footpath lights, light poles,led lights and wall lights.

Now we are creating our own brands and developing products suitable for market. Welcome all friends to contact us. We will make contribution to lightening your home.

Testing and Design

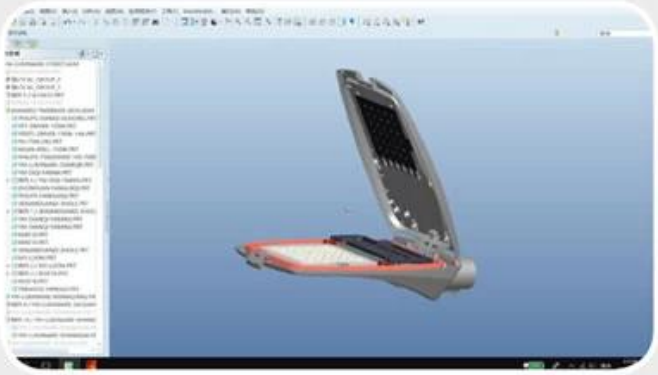

product design

led street lighting aging

ingress protetion (lp) testing equipment.

testing line.

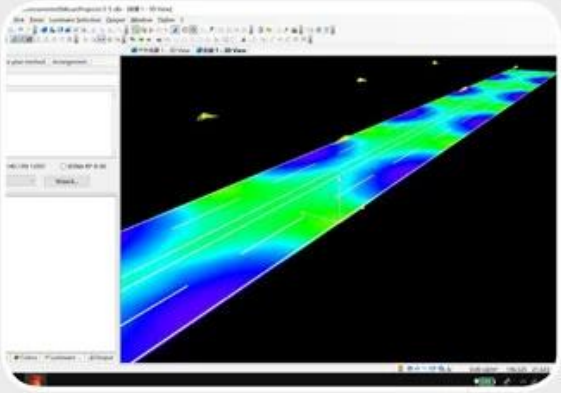

road lighting simulation

ullbrich sphere for testing luminous flux

Exhibittion

YUMRAY

Add：Minyin industrial Zone, Liangnong Town, Yuyao,Zhenjiang,China

Sale: 0574-22222345 / 22719888

0574-22672345(Fax)

Hotline: 0574-62359099

0574-62359077(Fax)

Http://www.ym-lighting.com

www.yyym2001.1688.com

www.yangminglamps.en.alibaba.com